Construction Solution Details:

LEVELROCK® Floor Underlayment Installed After Drywall

This USG System Detail must not be used without a complete evaluation by owner's design professional to verify the suitablity of its use with your specific application.

With Framing
Over LEVELROCK SRM-25 Sound Mat
(wood substrate)

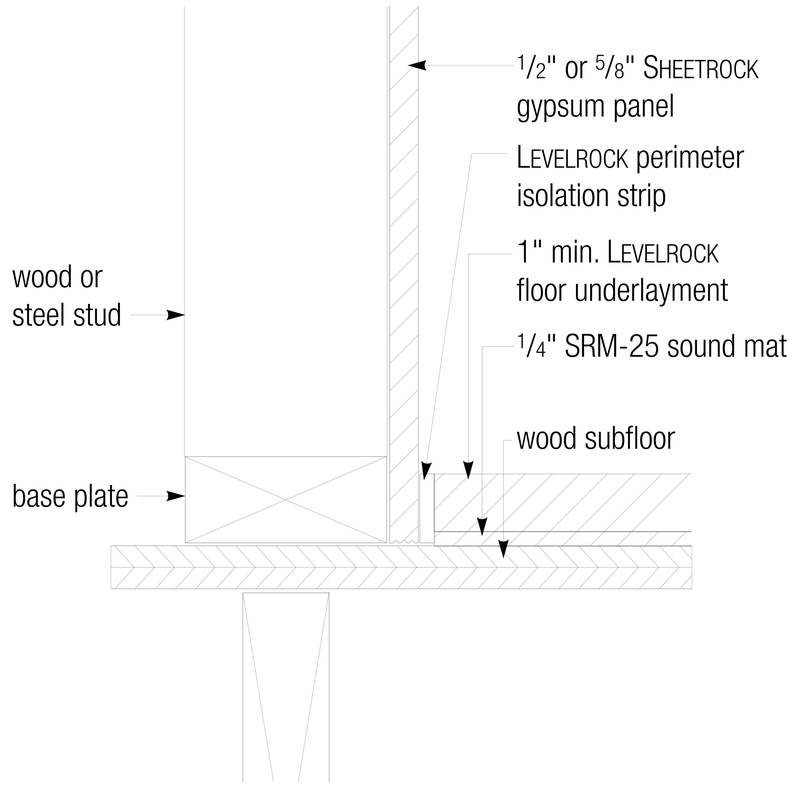

USG Corporation
125 South Franklin Street
Chicago, IL 60606-4678

Architectural and Technical Solutions
800-874-4968

Drawn by:	SK	**Date:**	August 30, 2006
Approved:	MW	**Date:**	
Revision:		**Change:**	
Scale:	3" = 1'-0"	**Project:**	SA305/rev 9-05 Details
		File:	