Construction Solution Details: Donn Suspension Systems

This USG System Detail must not be used without a complete evaluation by owner's design professional to verify the suitablity of its use with your specific application.

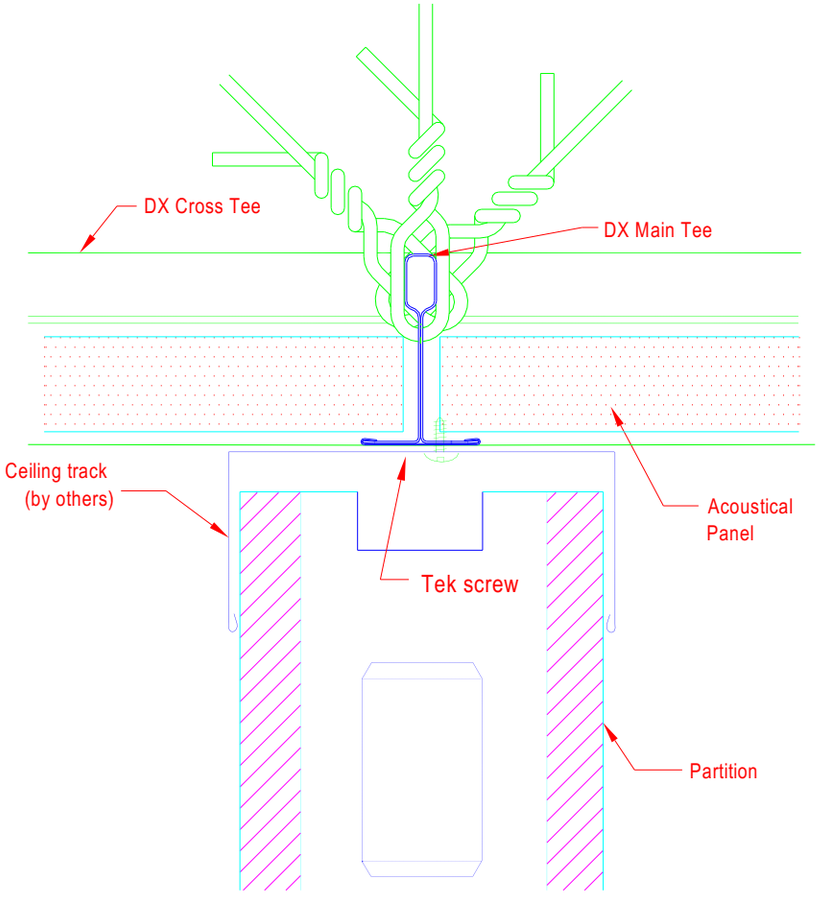

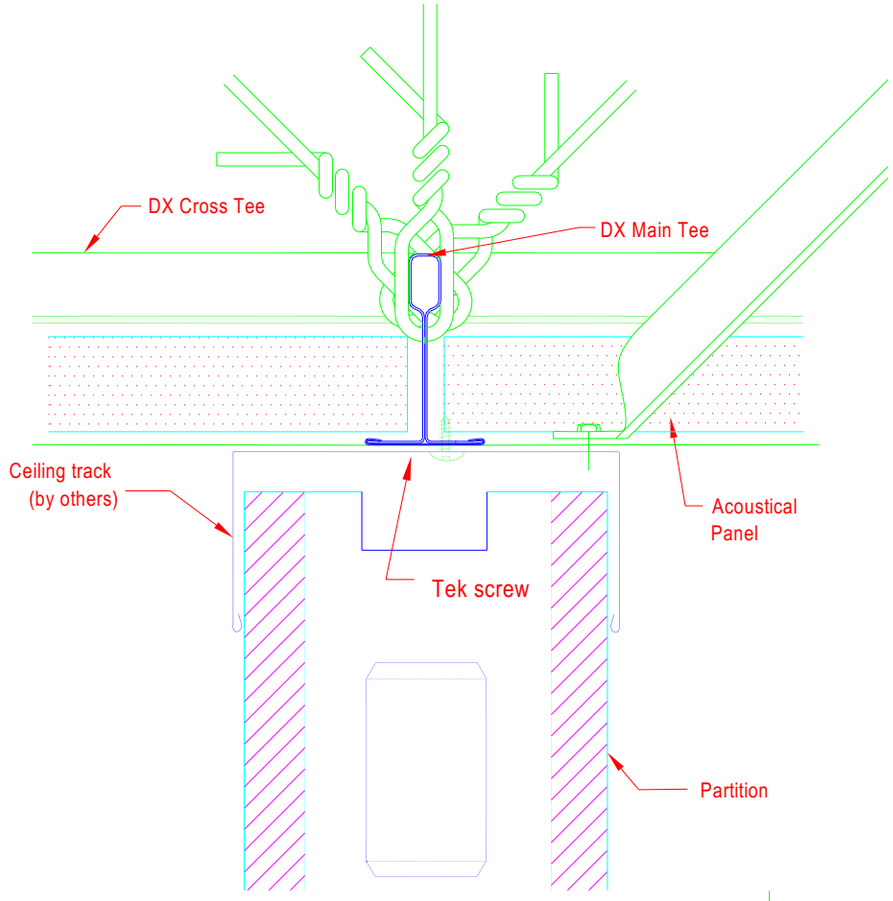

Partition Wall Attachment

IBC Seismic Categories D,E,F | 11

USG Corporation
125 South Franklin Street
Chicago, IL 60606-4678

Architectural and Technical Solutions
800-874-4968

Drawn by:	mc	Date:	09.16.05
Approved:		Date:	
Revision:	kp	Change:	
Scale:	n.t.s.	Project:	093410061
		File:	

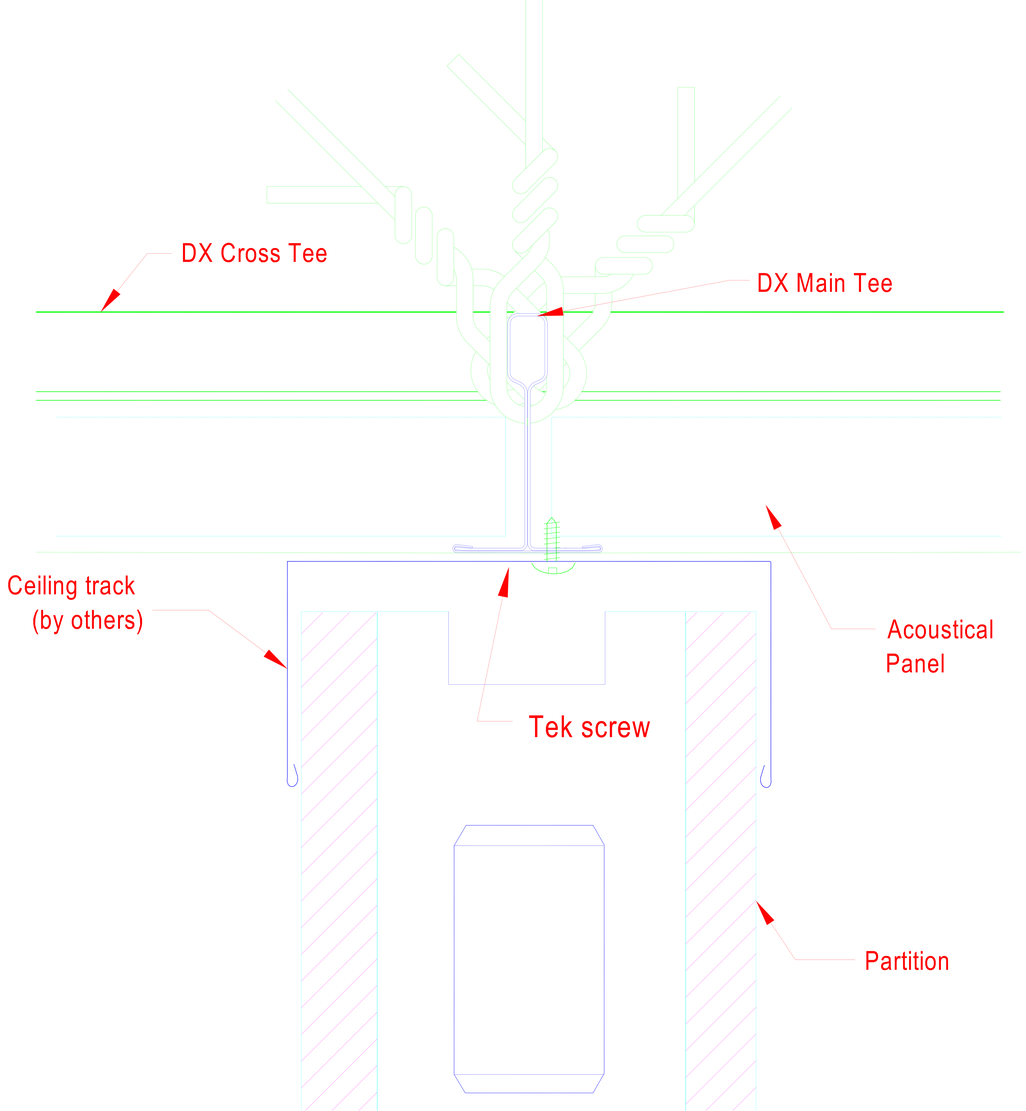
DX Cross Tee
DX Main Tee
Ceiling track
(by others)
Acoustical
Panel
Tek screw
Partition

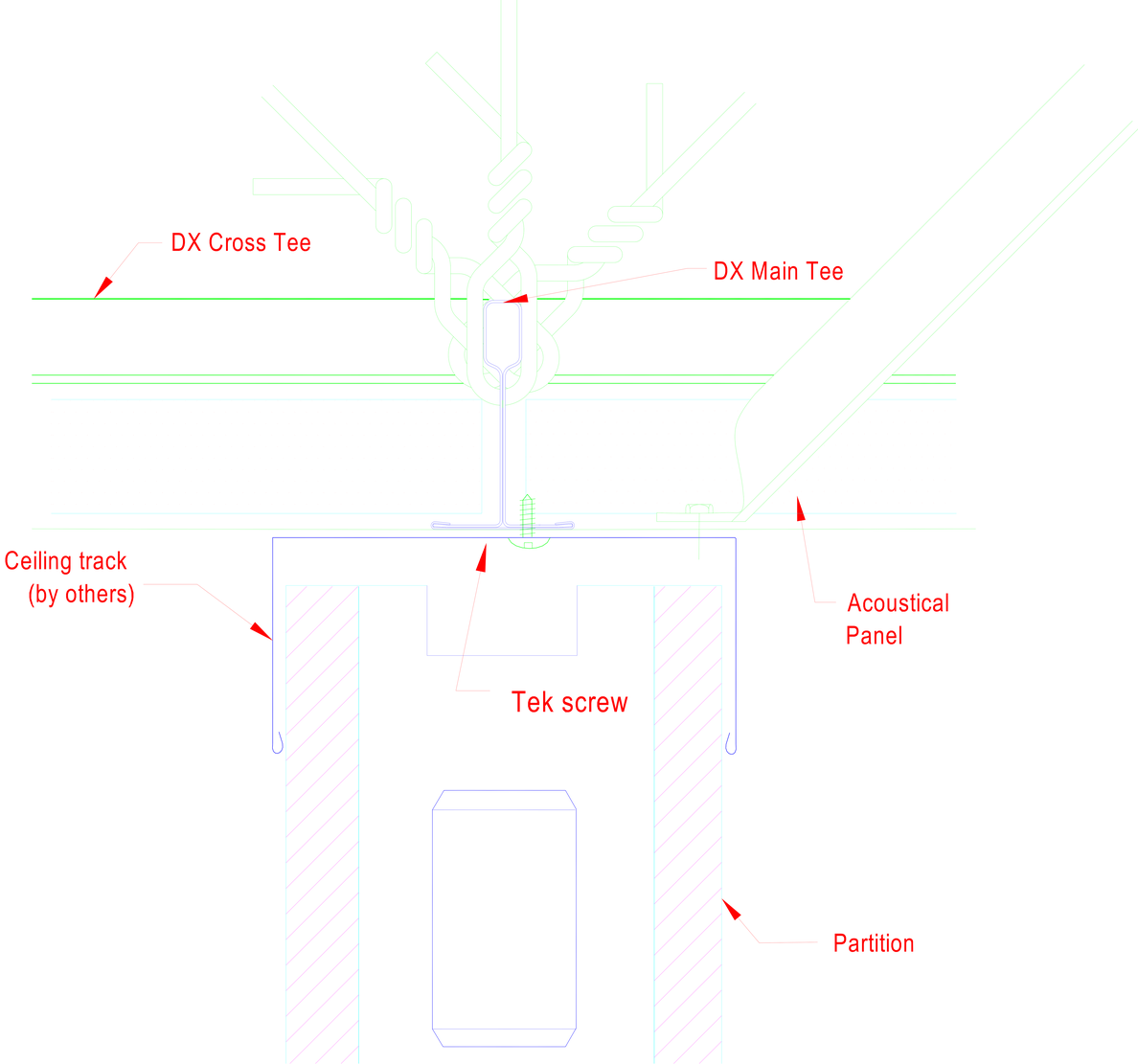
DX Cross Tee
DX Main Tee
Ceiling track
(by others)
Acoustical
Panel
Tek screw
Partition