Construction Solution Details: Drywall Suspension System

This USG System Detail must not be used without a complete evaluation by owner's design professional to verify the suitablity of its use with your specific application.

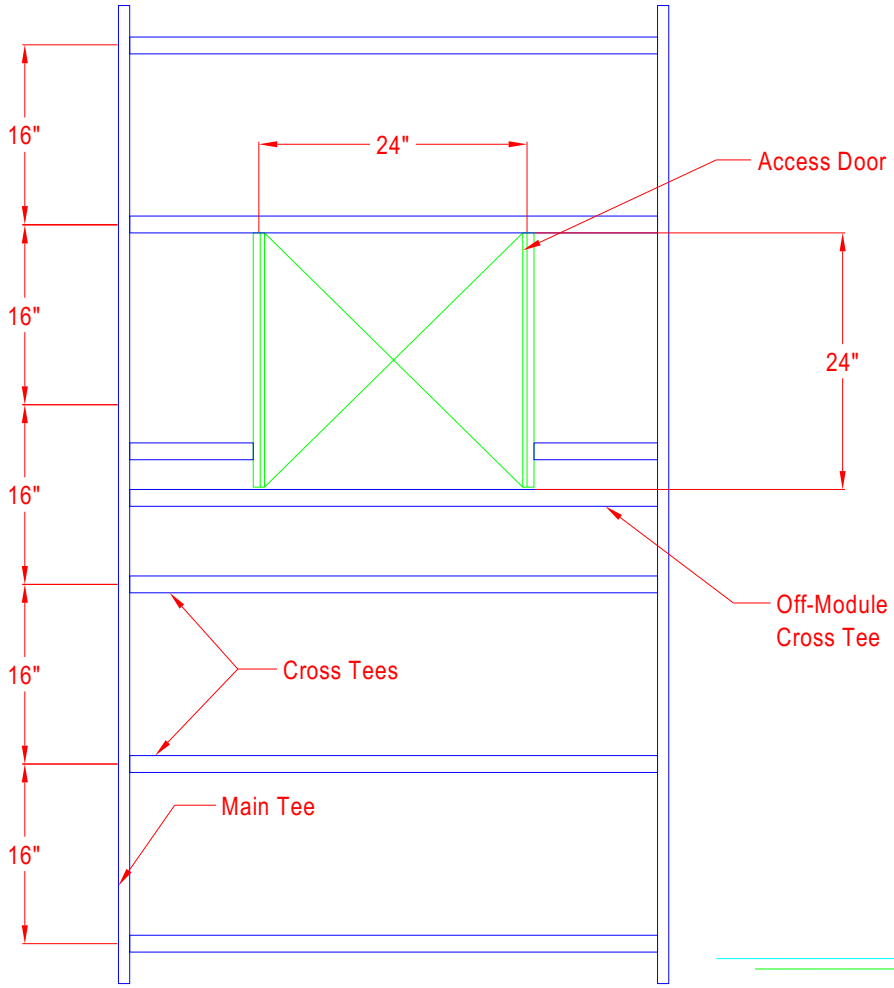

Flat Drywall Ceilings

Access Door | AC3152

USG Corporation
125 South Franklin Street
Chicago, IL 60606-4678

Architectural and Technical Solutions
800-874-4968

Drawn by:		Date:	03-10-06
Approved:		Date:	
Revision:	KP	Change:	
Scale:	n.t.s	Project:	
		File:	093410104

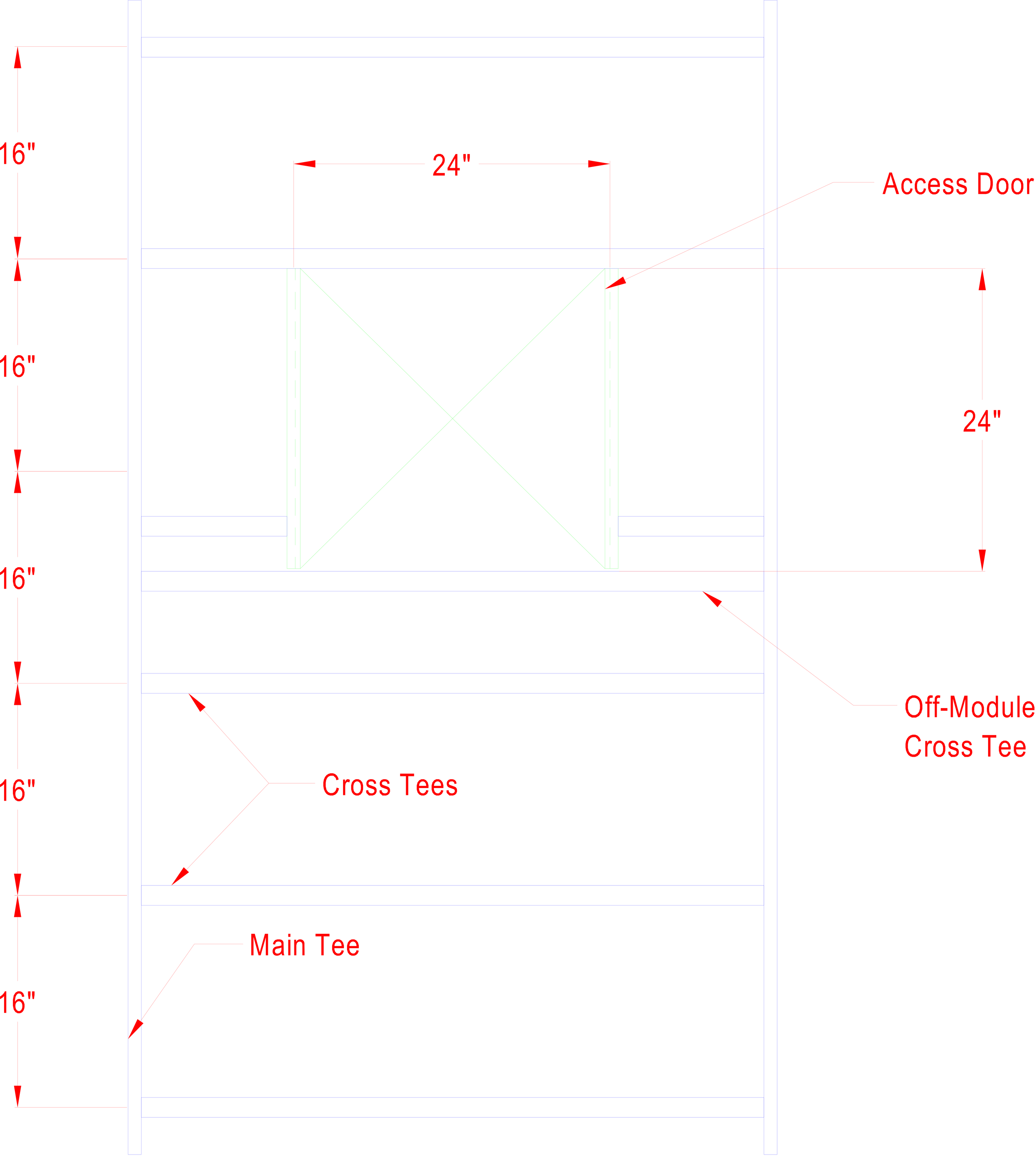
16"
24"
Access Door
16"
24"
16"
Off-Module
Cross Tee
16"
Cross Tees
Main Tee
16"

1

A-1