Construction Solution Details: Drywall Suspension System

This USG System Detail must not be used without a complete evaluation by owner's design professional to verify the suitablity of its use with your specific application.

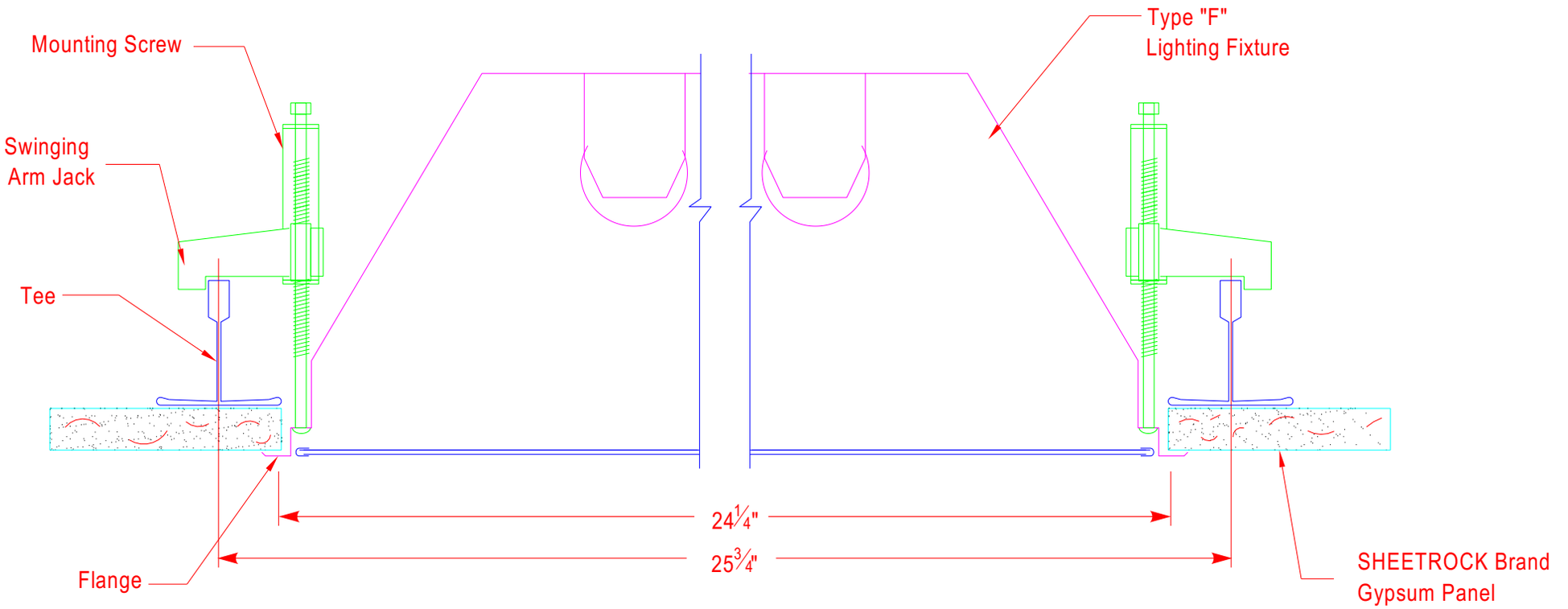

Utility Interfaces

Type"F" Light Fixture | AC3152

USG Corporation
125 South Franklin Street
Chicago, IL 60606-4678

Architectural and Technical Solutions
800-874-4968

Drawn by:		Date:	02-10-06
Approved:		Date:	
Revision:	KP	Change:	
Scale:	n.t.s	Project:	
		File:	093410108

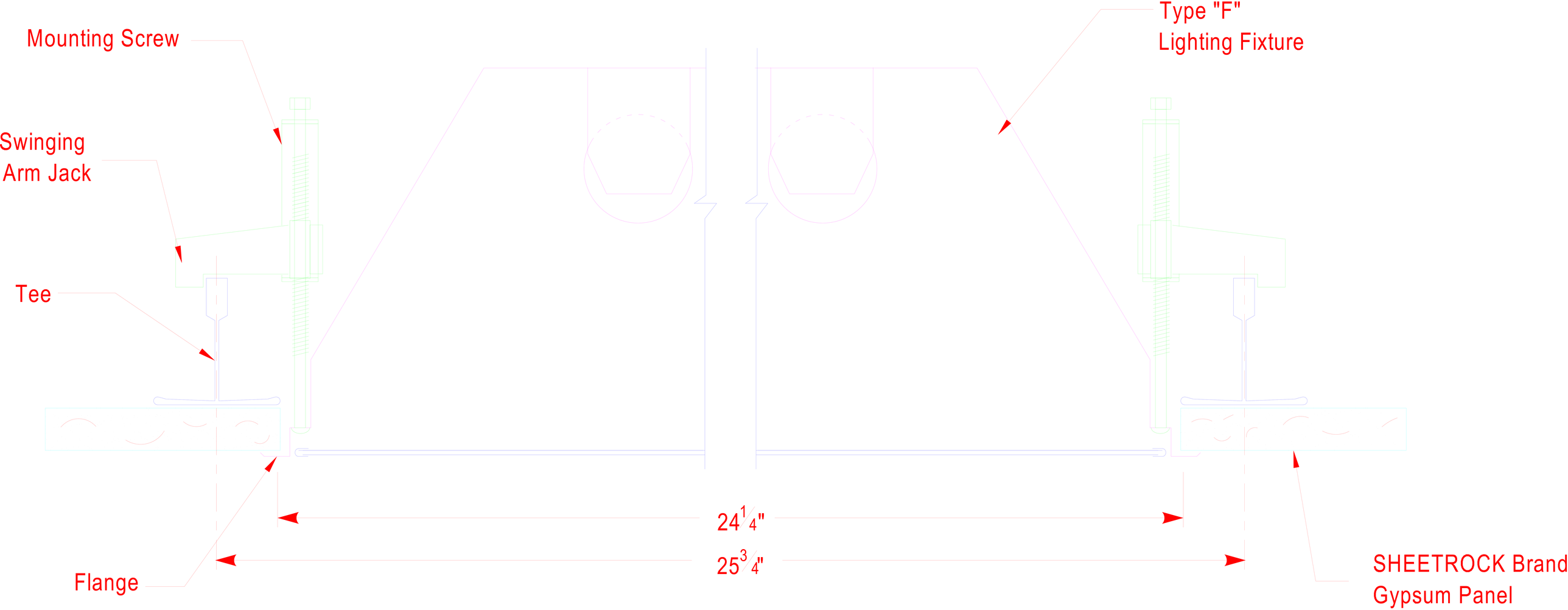
Mounting Screw
Type "F"
Lighting Fixture
Swinging
Arm Jack
Tee
24 1/4"
25 3/4"
Flange
SHEETROCK Brand
Gypsum Panel

Z alt

27