USG Durock on Drywall Suspension System Exterior Application (90 psf wind uplift)

This USG System Detail must not be used without a complete evaluation by owner's design professional to verify the suitablity of its use with your specific application.

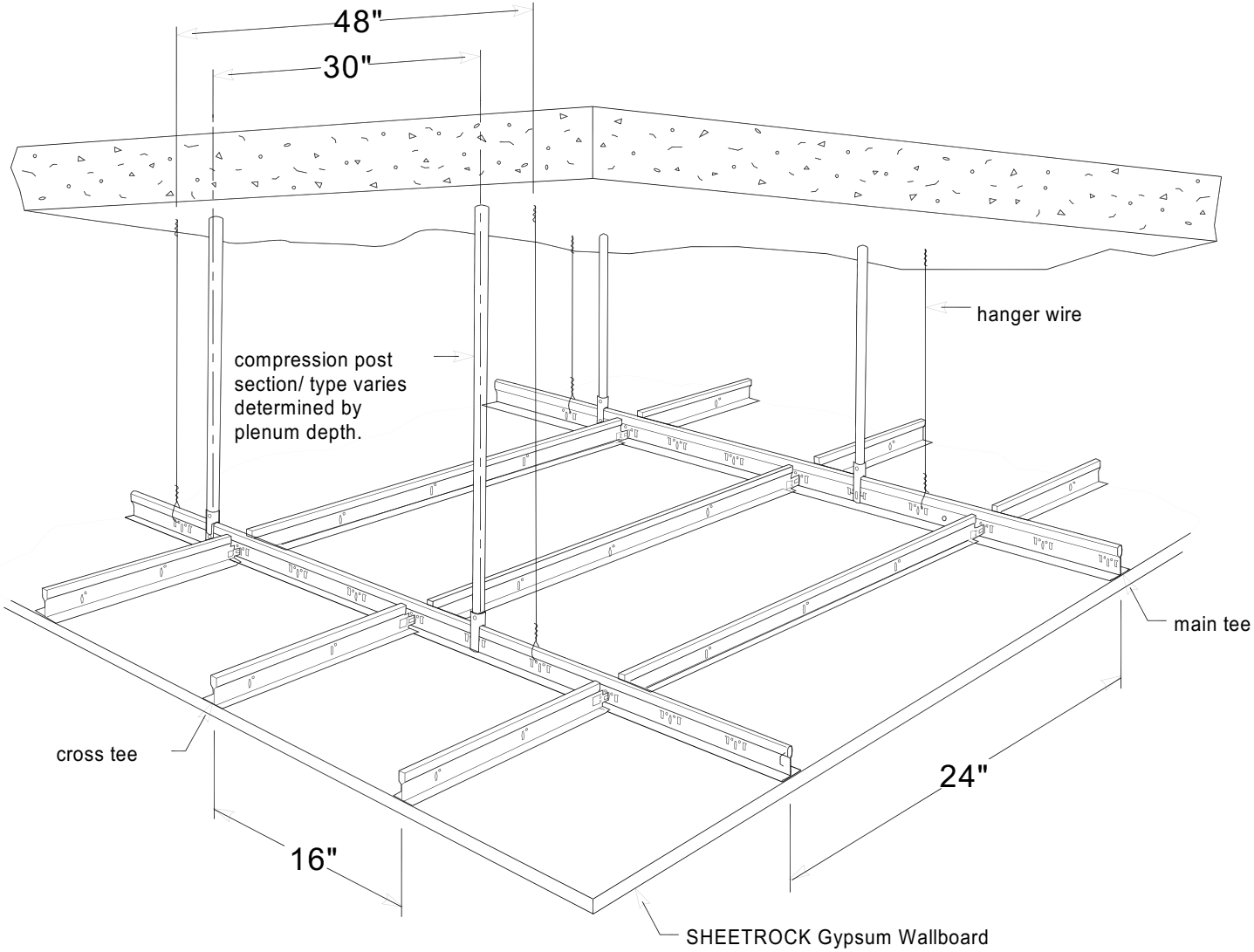

USG Corporation
125 South Franklin Street
Chicago, IL 60606-4678

Architectural and Technical Solutions
800-874-4968

Drawn by:	wrm	Date:	01.05.05
Approved:	093410114	Date:	
Revision:		Change:	
Scale:	not to scale	Project:	

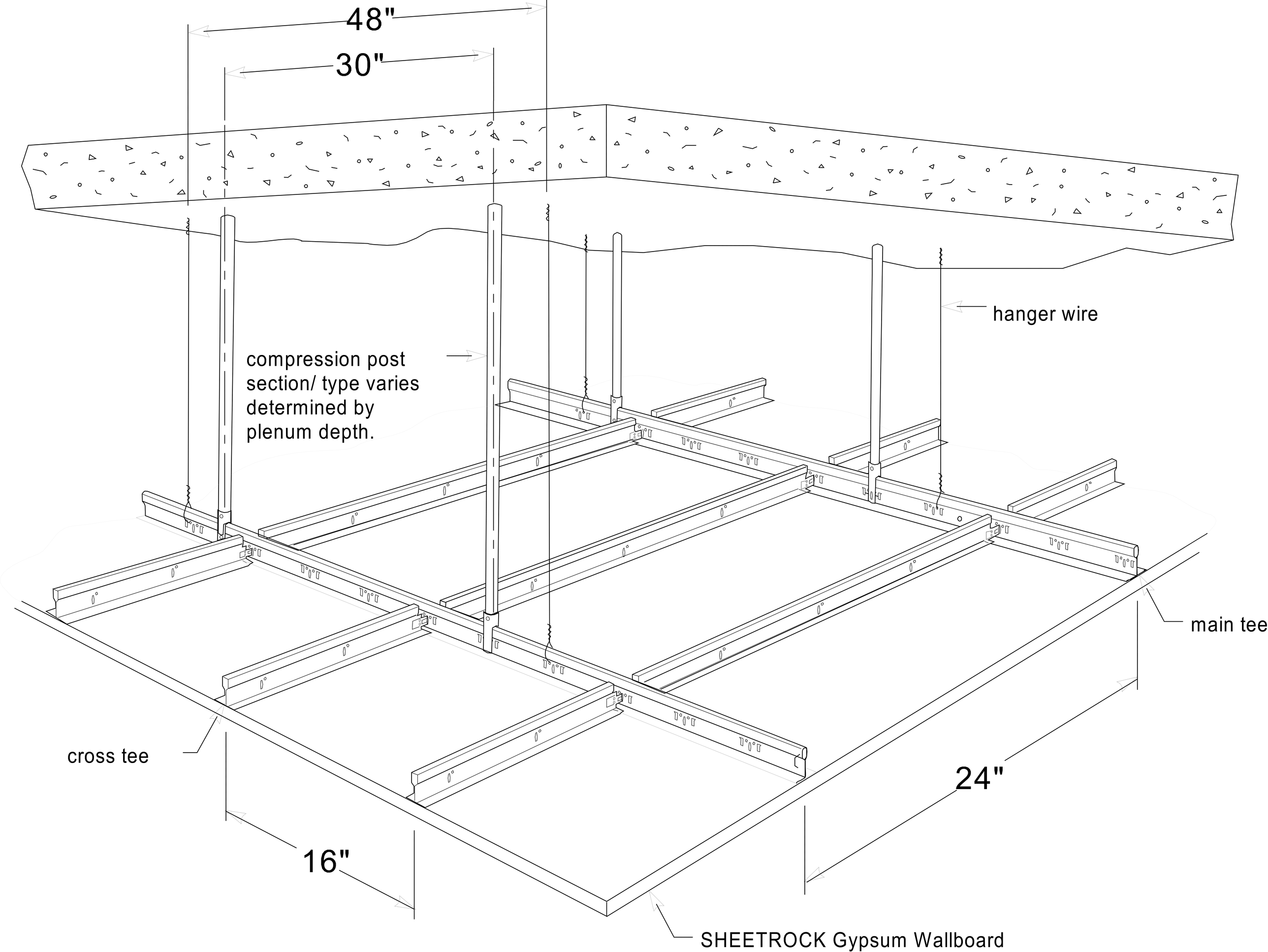
48"
30"
hanger wire
compression post
section/ type varies
determined by
plenum depth.
main tee
cross tee
24"
16"
SHEETROCK Gypsum Wallboard