This USG System Detail must not be used without a complete evaluation by owner's design professional to verify the suitablity of its use with your specific application.

Construction Solution Details: Edge Detail Parallel to Suspension Tee

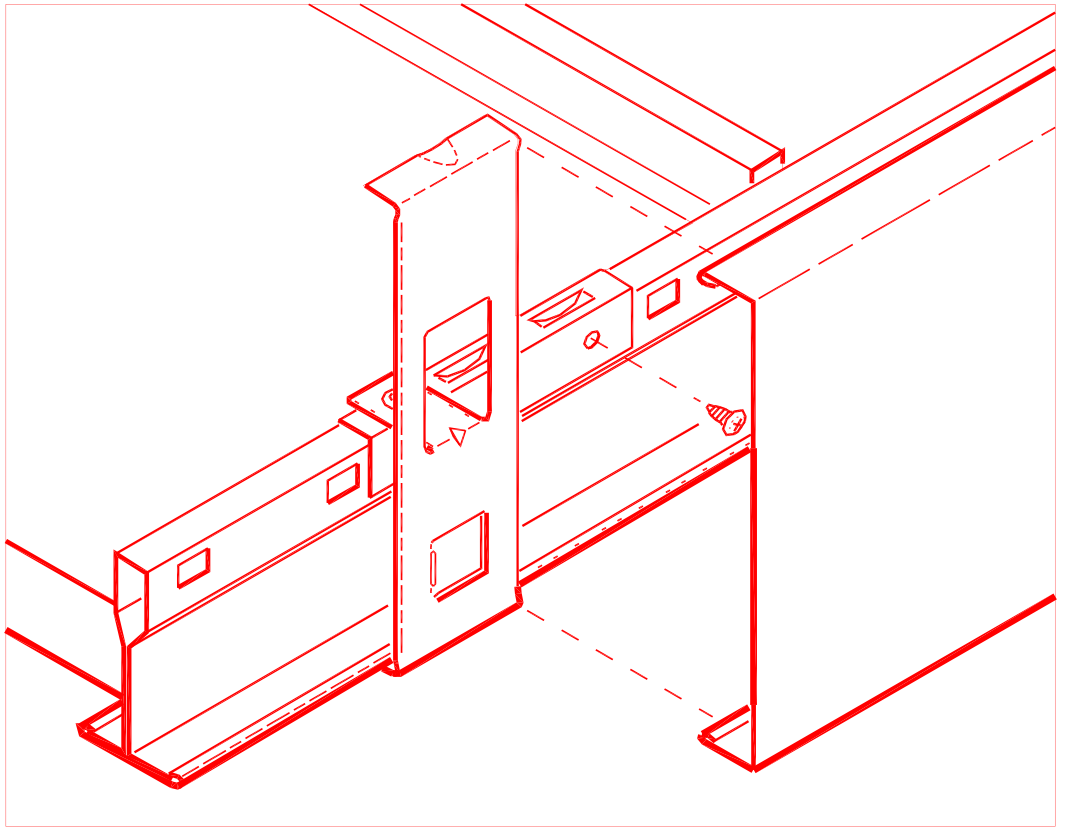

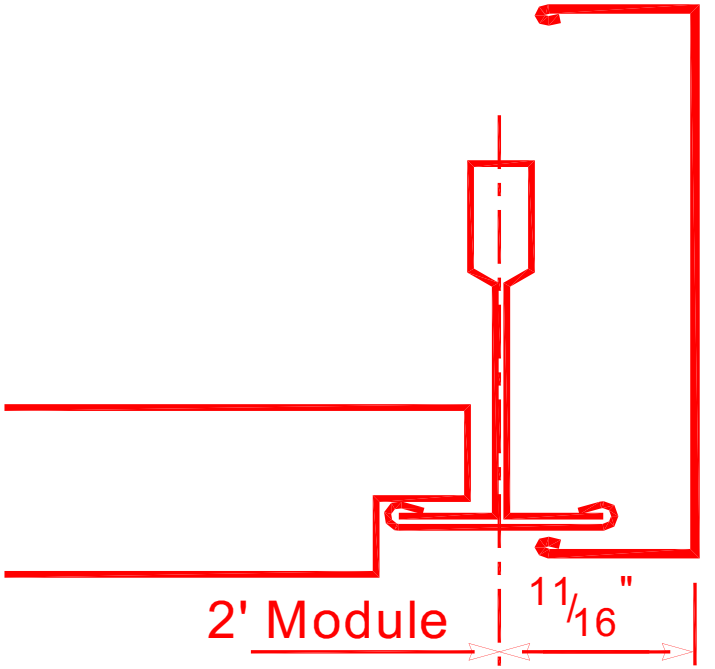

USG Corporation
125 South Franklin Street
Chicago, IL 60606-4678

Architectural and Technical Solutions
800-874-4968

Drawn by:	SG	Date:	June 22, 2006
Approved:	SM	Date:	
Revision:		Change:	
Scale:	Not to Scale	Project:	
		File:	091500084

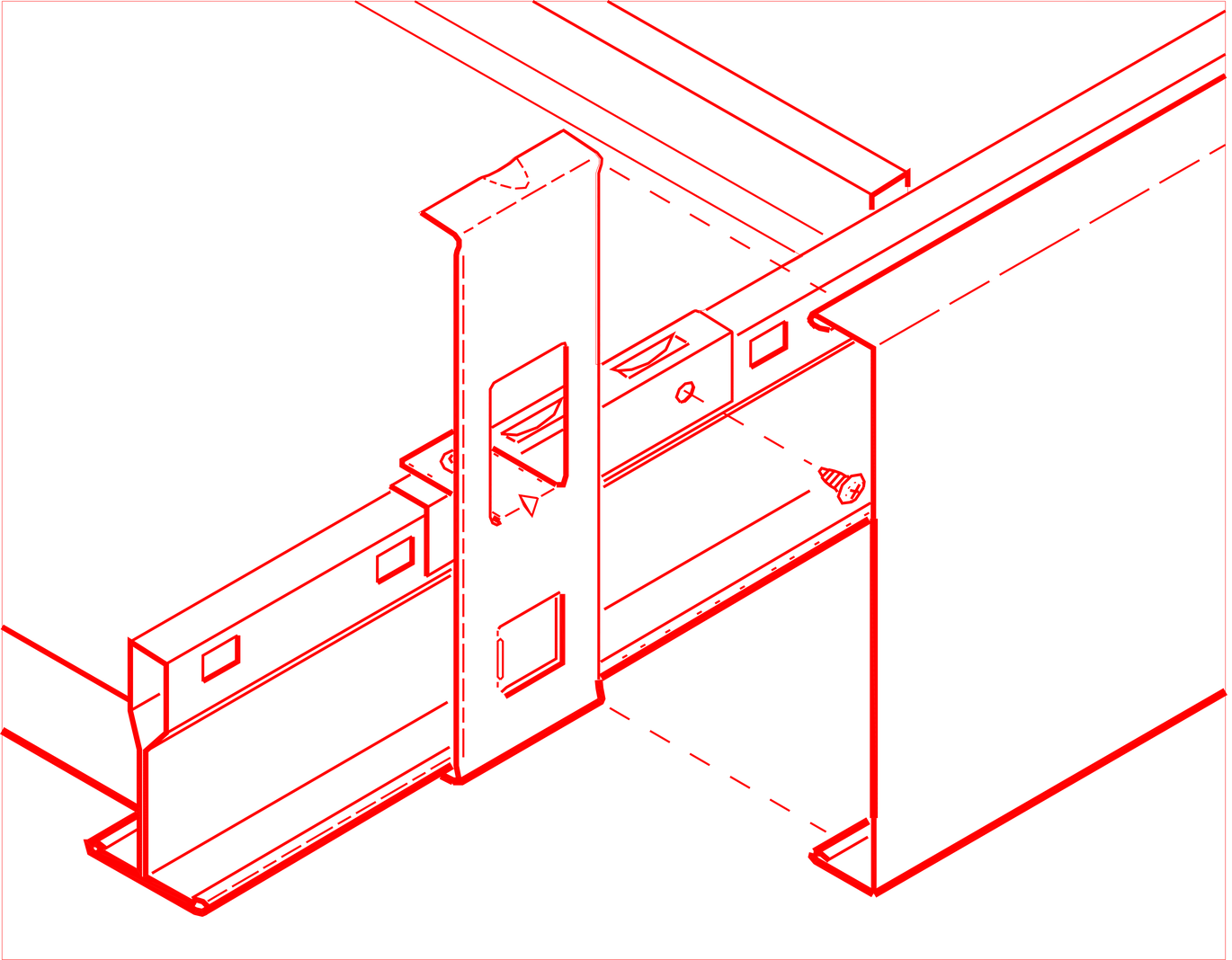

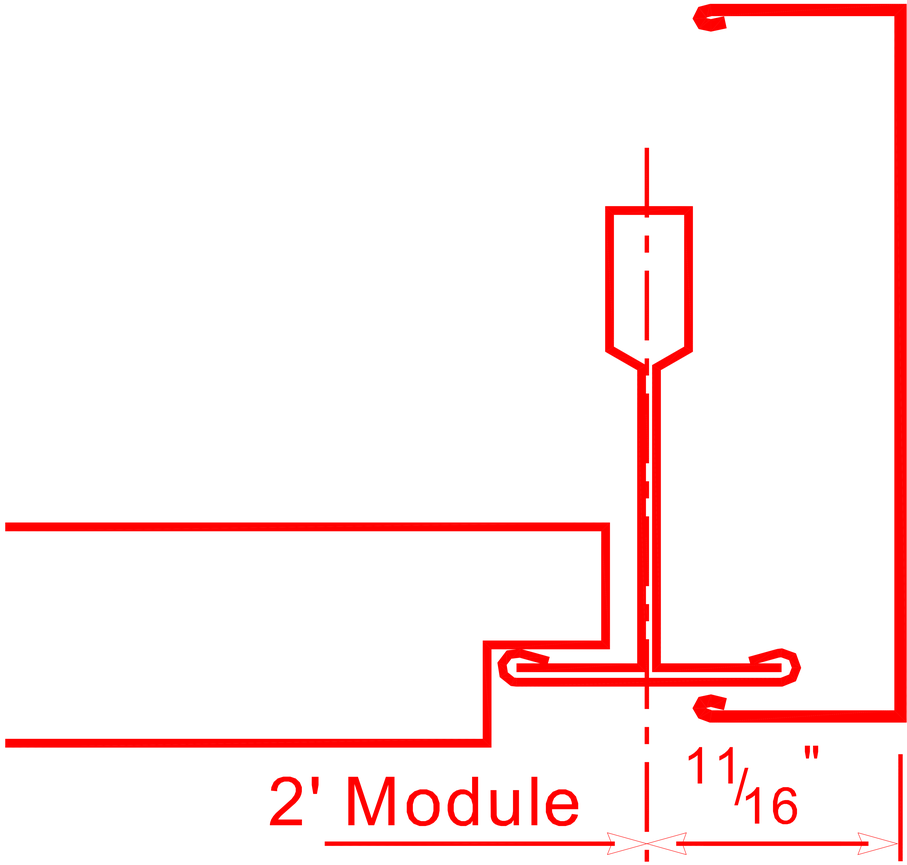
2' Module
11/16"