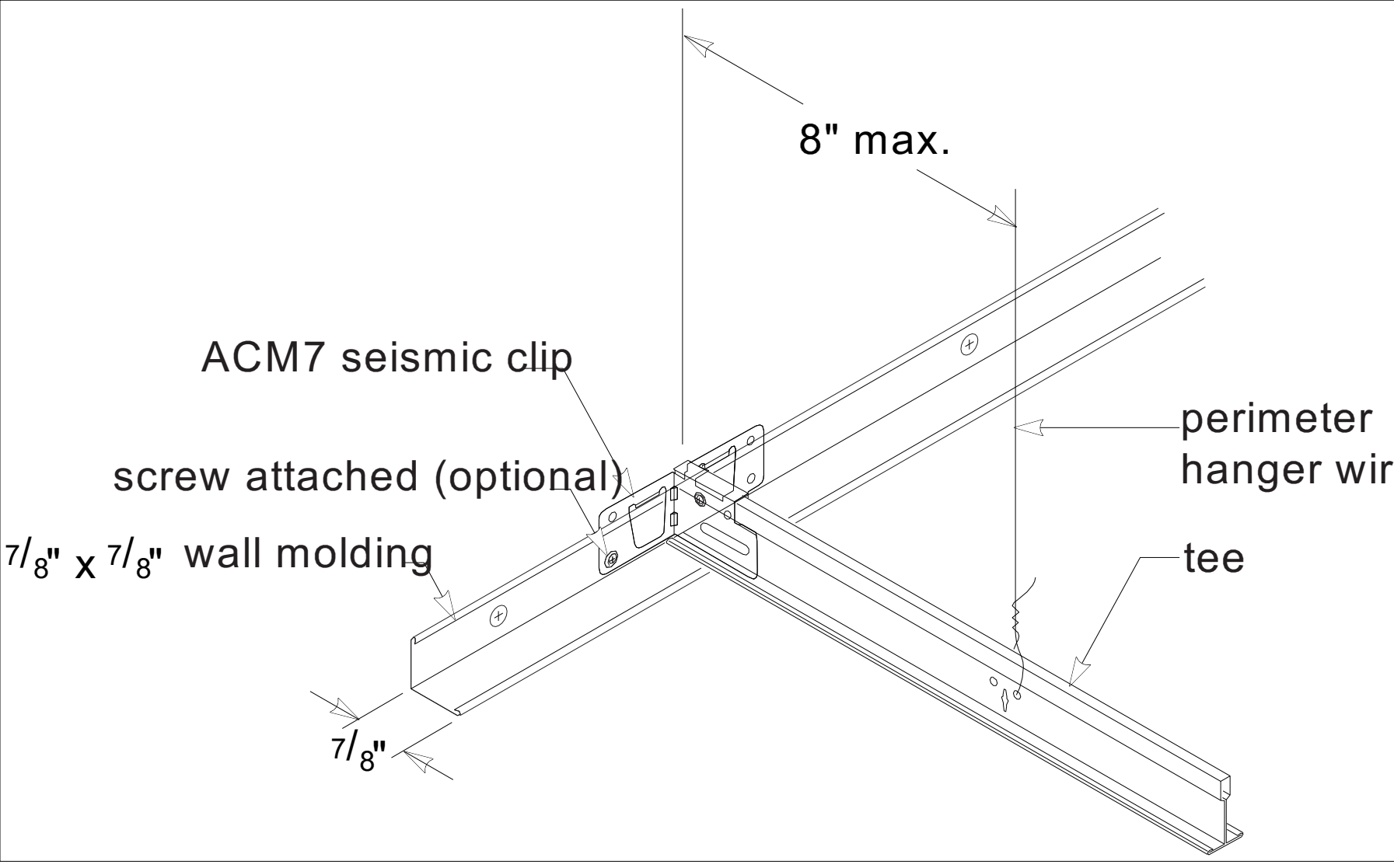
8" max.
ACM7 seismic clip
screw attached (optional)
7/8" x 7/8" wall molding
perimeter
hanger wire
tee
7/8"